Technical data sheet

Spreading rivet, KSN 1

Item no. 6178520



The KNW1 riveting tool should be used for rapid mounting and for the optimum function.
Dimension of the drill hole: 4.5 mm.
Total clamping strength: 2.2–4 mm

CE

PP Polypropylene

Master data

Item no.	6178520
Type	KSN1
Description 1	Body-bound rivet
Description 2	size 1
Dimension	Ø 4,5mm
Colour	Light grey
RAL number	7035
Material	Polypropylene
Material symbol	PP
Smallest sales unit (VG)	100 Piece
Weight	0,03 kg/100 pc.

Technical data

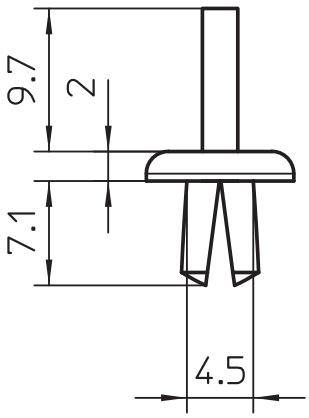

Dimension a	4,50 mm
Bore hole diameter	4,50 mm
Halogen-free	☑