GAGGENAU

SMITH & NORLAND



Kæliskápur, klæðanlegur

RC492305

400 series

Nýtanlegt rými: 579 lítrar.

Rafeindastýring.

Snertihnappar.

Breytileg hurðaropnun

Tæknileg atriði

Kröftug kælivifta.

Hljóðviðvörun ef hiti fer uppfyrir ákveðið gildi.

Dökkur antrasít litur á hurðarbökkum.

Home Connect: WiFi.

TFT-snertiskjár.

Kælir

Nýtanlegt rými í kælirými: 494 lítrar.

Nýtanlegt rými í skúffum: 85 lítrar.

Innra byrði úr ryðfríu stáli.

Hurðaropnun: Þrýstiopnun („Push-to-open“) og („Pull-to-open“).

Mjúklokun.

Hraðkæling.

Ein skúffa með stillanlegri rakastýringu.

Ein 0° C-skúffa („fresh cooling“).

Ein skúffa í fullri breidd.

Þrjár glerhillur, hæð stillanleg.

Glampalaus LED-lýsing (3500 K).

Neysla

Orkuflokkur E.

Raforkunotkun á ári: 182 kWst.

Hljóð: 40 dB.

Hámarksþyngd klæðningar: 43 kg.

Smíðamál

RC492-305

Hæð: 213,4 sm. Breidd: 91,4 sm.

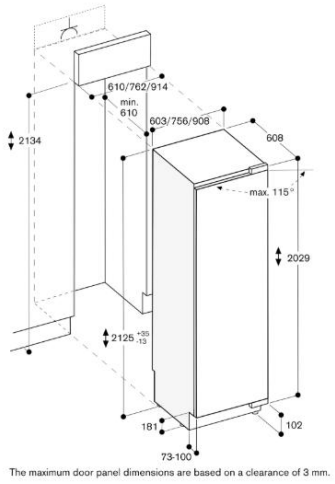

The maximum door panel dimensions are based on a clearance of 3 mm.

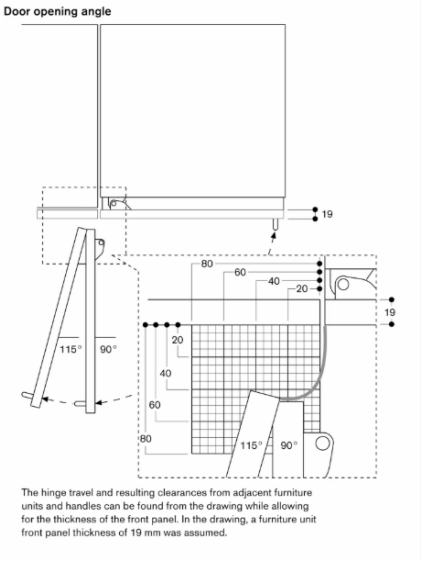

The hinge travel and resulting clearances from adjacent furniture units and handles can be found from the drawing while allowing for the thickness of the front panel. In the drawing, a furniture unit front panel thickness of 19 mm was assumed.

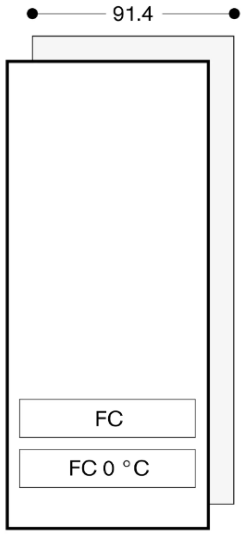

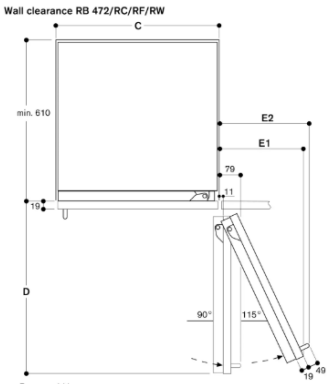

Recess width

C	D	E1	E2
457 mm	525 mm	235 mm	265 mm
610 mm	677 mm	299 mm	330 mm
762 mm	830 mm	364 mm	395 mm
914 mm	980 mm	428 mm	460 mm

In the drawing, a unit front thickness of 19 mm and a Gaggenau unit handle of 49 mm were taken as a basis.

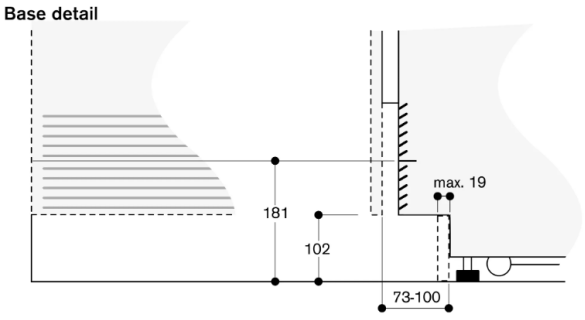

Based on the standard appliance height, the height of the plinth is 102 mm. Maximum plinth thickness 19 mm.