DISPLAY VISION 24 m IP41



Green buildings
Gold certified exit sign luminaire for "sustainable building" according to LEED

DISPLAY VISION

The smart design luminaire has a convincingly slender enclosure and is a real universal genius with regard to the possible types of installation. The high energy efficiency makes the Display Vision an officially good choice for LEED certified construction projects.



DISPLAY VISION	SYSTEM LUMINAIRE	RECHARGEABLE BATTERY LUMINAIRE
Viewing distance	24 m	
Degree of protection	IP41	
Class	I	
Enclosure material	Polycarbonate	
Enclosure colour/surface	white	
Terminal block	3 x 2.5□ for through wiring	
Light source	LED	
Ambient temperature	-20° C to +40° C	0° C to +40° C
Connected load (AC/DC)	7.7 VA/4.3 W	
Supply voltage	230V ± 10 %, 50/60 Hz/176-275 V DC	230V ± 10 %, 50/60 Hz
Rechargeable battery		4.8 V/0.8 Ah (NiMH)

VERSIONS

1 h with auto-check | with BUS check		• |
3 h with auto-check | with BUS check		• |
8 h with auto-check | with BUS check		
without monitoring module	•	
with monitoring module for SIBELON systems only	•	
with DALI monitoring		
Cinema version Luminous flux in normal mode 10 %		

SPECIAL FEATURE

- Pictogram set included
- Universal enclosure for wall and ceiling installation

OPTIONS /ACCESSORIES

- Recessed enclosure, ceiling installation
- Pendant installation kit
- Eye installation kit
- Suspended installation kit

WALL MOUNTED

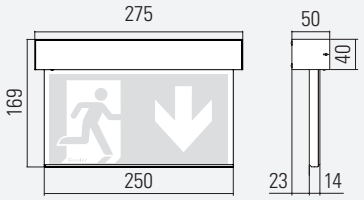

CEILING MOUNTED

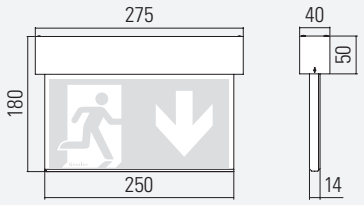

RECESSED CEILING INSTALLATION

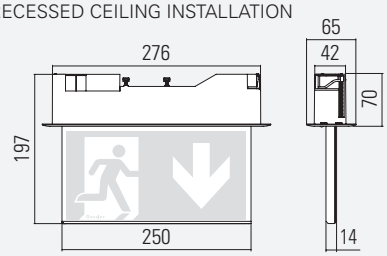

Ceiling cutout: 280 mm x 50 mm
Maximum ceiling thickness: 45 mm

PENDANT

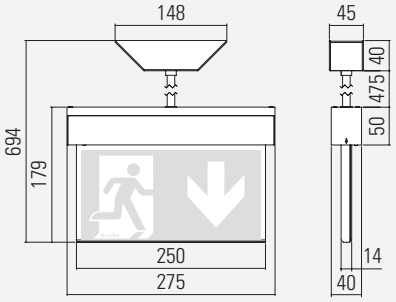

SUSPENDED

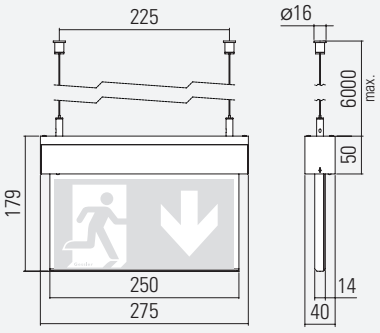

EYE INSTALLATION

